# RDE5

Differential pressure switch, explosion proof for high static pressure

BOURDON
The Original by Baumer

## Main Features

- Excellent repeatability
- Dead band adjustment for regulation
- Fix dead band for control and alarm
- High static pressure
- Explosion proof Hazardous areas 1, 2, 21, 22

## Applications

- Power generation safety equipment
- Pressurized chambers control
- Liquid level control

IP 66

## Technical Data

| | |
|---|---|
| Pressure range | 2 ... 10 mbar to 10 ... 2000 mbar |
| Temperature | Process : -15 ... +150 °C<br>Ambient : -20 ... + 55 °C<br>Storage : -40 ... + 70 °C |
| Repeatability | ± 1% F.S. / constant pressure cycle |
| CE conformity | Low Voltage Directive 2014/35/EU<br>ATEX Directive 2014/34/EU |
| Protection rating | IP 66 (EN 60529) |
| Process Connection | Stainless steel 1.4404 (316L) |
| Sensing element | Pressure range codes 111 to 131<br>Flanges: Stainless steel 1.4404 (316L)<br>Diaphragm: Nitrile Butyl rubber<br>Pressure range codes 156 to 163<br>Flanges: Stainless steel 1.4404 (316L)<br>Diaphragm: Viton® |
| Scale | Internal. Accuracy on reading ± 5% F.S. |
| Housing | Type RA80, explosion proof, flameproof<br>Alumunium epoxy painted.<br>Captive stainless steel screws |
| Mounting | 3 back lugs for wall mounting |
| Ground connection | Via internal terminal block |
| Electrical connection | Terminal block with metallic cable gland for Ø 7 to 12 mm standard |
| Electrical function | See ordering code details on page 5 |
| Adjustment | 2 external adjustment screws for set point and deadband.<br>When set point adjustment is required it is necessary to know the static pressure, as it has an influence on the set point. |
| ATEX/IECEx | Certificate<br>LCIE 03 ATEX 6231X (Type RA80)<br>IECEx LCIE 15.0061X<br>Classification<br>CE<br>Ex II 2 G D<br>Ex d IIC T6 or T5 Gb<br>Ex tb IIIC IIC T80 °C or T95 °C Db<br>T° ambient<br>-20 °C to +60 °C (T6 or T80 °C) or<br>-20 °C to +70 °C (T5 or T95 °C) |

## Options

| | |
|---|---|
| Customer specific set point adjustment | Code SETP |
| Oxygen application | Code 0765 |
| Lead seal of the adjustment screws | Code 8990 |
| Mounting on 2" pipe | Code 0407 |
| Stainless steel tag plate and wire | Code 9941 |

Design and specifications subject to change without notice
2018-04-20

# RDE5

## Differential pressure switch, explosion proof for high static pressure

## Principle

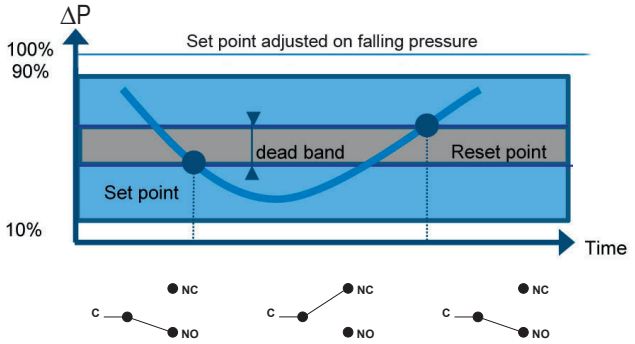


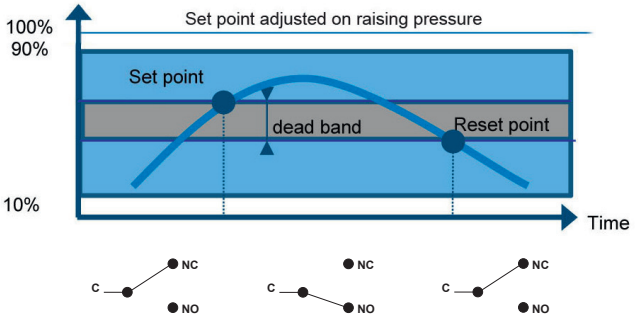


A flexible sensing element actuates a microswitch by means of a piston. The set point is adjusted by means of a compressible spring installed in opposition.

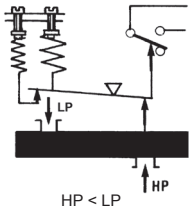

HP < LP

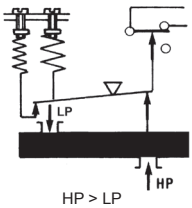

HP > LP

Set point and reset point must be between 10% and 90% of the selected scale.

**Standard factory adjustment**
Setpoint at 50% of the scale on falling pressure

**Customer speciffic factory adjustment (option SETP)**
The following specifications have to be given with the order:
- Setpoint value
- Adjustment on falling or raising pressure.
- Static pressure
- Dead band value (as needed) when using an adjustable dead band switch

## Electrical connections

**1 SPDT**

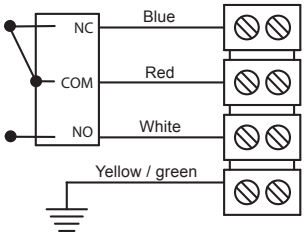


**2 SPDT**

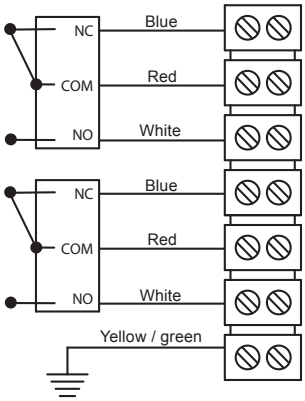


**Hazardous areas: 1, 2, 21, 22**

| -20 °C ≤ Ta ≤ +70 °C | Dust IP6x | Gases |
|---|---|---|
| | T° surface | Class |
| Ta = 60 °C | 80 °C | T6 |
| Ta = 70 °C | 95 °C | T5 |

**<u>Important</u> : Maximum power dissipated inside enclosure does not exceed 5 W**

All necessary measures must be taken by the user, to avoid the calorific transfer from the fluid to the apparatus head increasing the head's temperature to such that it reaches the self-ignition temperature of the gas in which it is used.

2018-04-20 Design and specifications subject to change without notice

# RDE5

Differential pressure switch, explosion proof for high static pressure

## Micro switches characteristics

| Switch code | A (B) | M (K) | C (W) | E (F) | D (V) |
|---|---|---|---|---|---|
| Type | Standard | Gold contact | Hermetic | Ultra sensitive | Ultra sensitive Hermetic |
| 6 Vdc | 0.4... 10 A | 10... 50 mA | 5 mA ... 4 A | 0.4... 1 A | 0.4... 4 A |
| 12 Vdc | 0.4... 10 A | 10... 50 mA | 5 mA ... 4 A | 0.4... 1 A | 0.4... 4 A |
| 24 Vdc | 0.4... 6 A | 10... 50 mA | 5 mA ... 4 A | 0.4... 1 A | 0.4... 4 A |
| 30 Vdc | 0.4... 6 A | 10... 50 mA | 5 mA ... 3 A | 0.4... 1 A | 0.4... 2 A |
| 48 Vdc | 0.4... 6 A | 10... 50 mA | 5 mA ... 3 A | N/A | N/A |
| 110 Vdc | 0.1... 0.5 A | 10... 50 mA | 5 mA ... 1 A | N/A | N/A |
| 220 Vdc | 0.1... 0.25 A | 10... 50 mA | 5 mA ... 0.5 A | N/A | N/A |
| 115 Vac | 0.4... 10 A | 10... 50 mA | 50 mA ... 3 A | 0.4... 10 A | N/A |
| 250 Vac | 0.2... 10 A | N/A | 50 mA ... 2.5 A | 0.2 ... 10 A | N/A |
| Dielectric rigidity between contacts and ground | 2000 V | 2000 V | 1500 V | 2000 V | 1000 V |

## Adjustable ranges

| Scale | Max ΔP | Max P Static | Code | Micro-switch dead band (1) | | | | | | | |
|---|---|---|---|---|---|---|---|---|---|---|---|
| | | | | Adjustable dead band | | | | Fixed dead band | | | |
| | | | | A (B*) M (K*) | | C(W*) | | E(F*) | | D (V*) | |
| | | | | 10% | 90% | 10% | 90% | 10% | 90% | 10% | 90% |
| mbar | mbar | bar | | mbar | | | | | | | |
| 2 ... 10 | 10 | 0 ... 5 | 111 | 1.8 - 15 | 2.4 - 15 | 6.7 - 15 | 6.7 - 15 | 0.45 | 0.6 | 2.25 | 3 |
| 2 ... 20 | 50 | 0 ... 5 | 112 | 2.6 - 30 | 3.3 - 30 | 7.5 - 30 | 8 - 30 | 0.6 | 0.75 | 3 | 4.5 |
| 2 ... 50 | 50 | 0 ... 5 | 121 | 2.6 - 40 | 3.3 - 40 | 7.5 - 40 | 8 - 40 | 0.6 | 0.75 | 3 | 4.5 |
| 2 ... 100 | 100 | 0 ... 5 | 131 | 2.6 - 60 | 3.7 - 60 | 8.2 - 60 | 15 - 60 | 0.75 | 1.05 | 3 | 4.5 |
| 10 ... 200 | 200 | 5.5 ... 50 | 156 | 12 - 120 | 15.5 - 120 | 52 - 120 | 67 - 120 | 3.75 | 5.1 | 15 | 19.5 |
| 10 ... 400 | 400 | 5.5 ... 50 | 157 | 22 - 225 | 30 - 225 | 60 - 225 | 75 - 225 | 6.75 | 9 | 27 | 36 |
| 10 ... 1000 | 1000 | 5.5 ... 50 | 158 | 27 -225 | 33 - 225 | 67 - 225 | 90 - 225 | 7.5 | 10.5 | 33 | 40 |
| 10 ... 700 | 700 | 5.5 ... 80 | 161** | 30 - 300 | 45 - 300 | 90 - 525 | 135 - 525 | 9 | 12 | 36 | 54 |
| 10 ... 1500 | 1500 | 5.5 ... 80 | 162** | 30 - 450 | 45 - 450 | 90 - 525 | 150 - 525 | 9 | 12 | 36 | 54 |
| 10 ... 2000 | 2000 | 5.5 ... 80 | 163** | 40 - 450 | 90 - 450 | 135 - 525 | 300 - 525 | 13 | 18 | 54 | 108 |

(*) For version with 2 microswitches lower values of the dead band must be multiplied x 1.5
(**) G 1/4 female only

(1) The value of the dead band is depending on the value of the set point.
This table contains the dead band values for set point adjustment at 10% and 90% of the selected scale. For adjustable dead band the lower value corresponds to the dead band spring totally released and the higher corresponds to the dead band spring fully tensed. For other set points the dead band value can be calculated by linear interpolation between the values at 10% and 90%.

2018-04-20 Design and specifications subject to change without notice

# RDE5

Differential pressure switch, explosion proof for high static pressure

## Dimensions (mm)

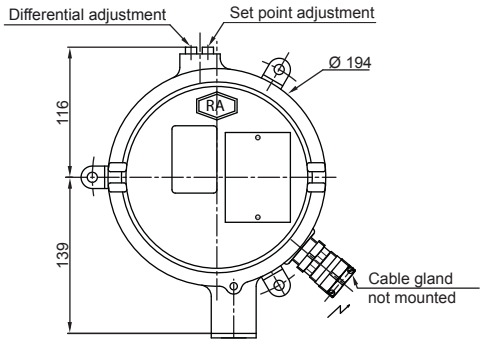


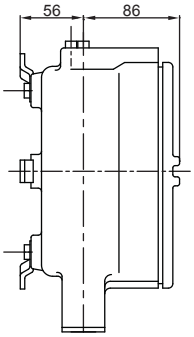


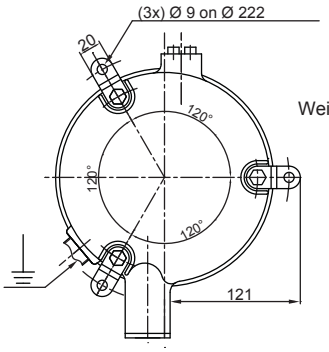


Weight : 4.4 kg

**Pressure range codes: 111 - 112 - 121 - 131**
Weight: 8.8 kg

**Pressure range codes: 156 - 157 - 158**
Weight: 4.7 kg

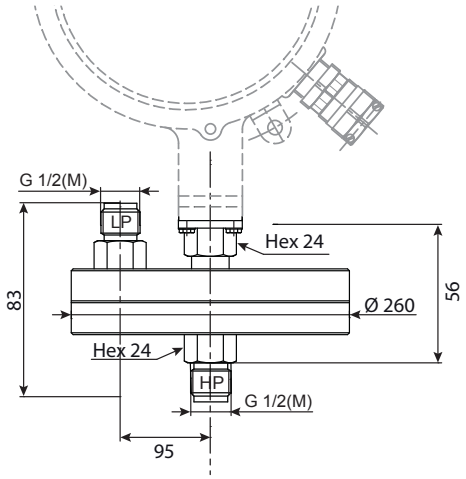


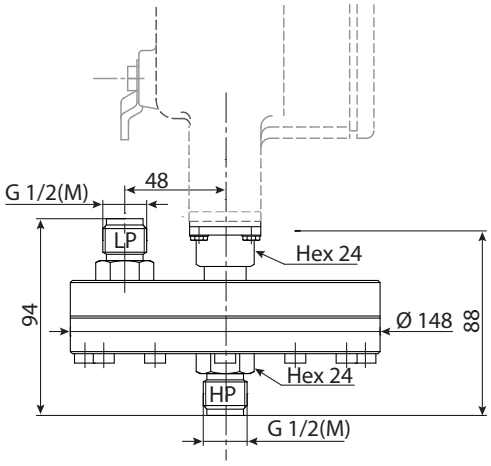


**Pressure range codes: 161-162-163**
Weight: 5.4 kg

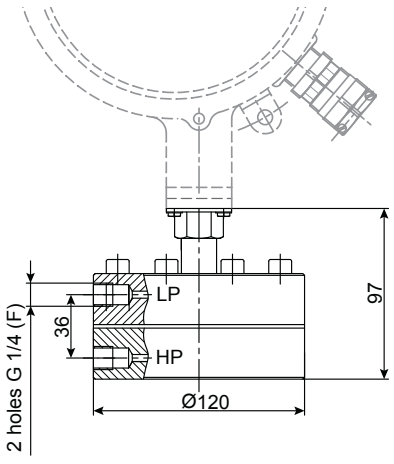


Design and specifications subject to change without notice
2018-04-20

# RDE5

Differential pressure switch, explosion proof for high static pressure

## Ordering details RDE5

| | RD | E | – | 5 | | | . | xxx | / |
|---|---|---|---|---|---|---|---|---|---|
| **Model** | | | | | | | | | |
| Differential pressure switch | RD | | | | | | | | |
| **Approvals** | | | | | | | | | |
| Explosion proof | | E | | | | | | | |
| | | | – | | | | | | |
| **Sensing element** | | | | | | | | | |
| Diaphragm (Nitrile Butyl rubber, ranges 111 to 131, Viton®, ranges 156 to 163) | | | | 5 | | | | | |

| **Type of micro switches** | **Deadband** | |
|---|---|---|
| 1 SPDT standard changeover switch | Adjustable | A |
| 2 SPDT standard changeover switch | Adjustable | B |
| 1 SPDT hermetically changeover switch | Adjustable | C |
| 2 SPDT hermetically changeover switch | Adjustable | W |
| 1 SPDT ultra sensitive changeover switch | Fix | E |
| 2 SPDT ultra sensitive changeover switch | Fix | F |
| 1 SPDT hermetically, ultra sensitive changeover switch | Fix | D |
| 2 SPDT hermetically, ultra sensitive changeover switch | Fix | V |
| 1 SPDT gold contact changeover switch | Adjustable | M |
| 2 SPDT gold contact changeover switch | Adjustable | K |

| **Process connection** | |
|---|---|
| G 1/4 female (only pressure ranges 161, 162, 163) | H |
| G 1/2 male (standard) | 3 |
| 1/2 NPT male | 6 |
| 1/4 NPT female | 8 |
| | . |

| **Pressure range (mbar)** | **Pressure range (kPa)** | | |
|---|---|---|---|
| 2 ... 10 | 0.2 ... 1 | | 111 |
| 2 ... 20 | 0.2 ... 2 | | 112 |
| 2 ... 50 | 0.2 ... 5 | | 121 |
| 2 ... 100 | 0.2 ... 10 | | 131 |
| 10 ... 200 | 1 ... 20 | | 156 |
| 10 ... 400 | 1 ... 40 | | 157 |
| 10 ... 1000 | 1 ... 100 | | 158 |
| 10 ... 700 | 1 ... 70 | Process connection G1/4 female | 161 |
| 10 ... 1500 | 1 ... 150 | Process connection G1/4 female | 162 |
| 10 ... 2000 | 1 ... 200 | Process connection G1/4 female | 163 |
| **Options to be added behind the / (see example below)** | | | / |

## Ordering example with options

| RD | E | – | 5 | C | 3 | . | 111 | / | 0407 | _ | 9941 |
|---|---|---|---|---|---|---|---|---|---|---|---|

Differential pressure switch
With ATEX/IECEx approval explosion proof
Sensing element diaphragm
1 SPDT hermetically changeover switch
Process connection G 1/2 male
Pressure range 2 ... 10 mbar
Option: Mounting on 2" pipe
Option: Stainless steel tag plate and wire

Design and specifications subject to change without notice
2018-04-20